IPC542E-DL-IN 2MP WDR Low-light Network Box Camera

Key Features

Optics

- Day/night functionality
- Lowlight surveillance
- 3D DNR (Digital Noise Reduction)
- Up to 120 dB WDR(Wide Dynamic Range)

Compression

- Dual streams
- ROI (Region of Interest)
- 9:16 corridor mode
- Customized OSD

Network

- NAA (Network Auto-Adaptability) to cope with up to 5% network packet loss
- UNP(Universal Network Passport) patented technology for NAT traversal
- Dual direct-to-iSCSI data block storage
- ONVIF Conformance

Structure

- AC 24V /DC 12 V/PoE with uninterruptible power supply
- Wide temperature range: -20°C to 60°C (-4°F to 140°F)
- Wide voltage range of ±25%
- 6 KV surge protection designed for network interface

Specifications

Camera	IPC542E-DL-IN
Sensor	1/2.8", 2Megapixel, progressive scan CMOS
Day/Night	IR-cut filter with auto switch (ICR)
Shutter	Auto/Manual, 1/6~1/8000 s
Min. Illumination	Color: 0.02 Lux (F1.2, 50IRE) Black & White: 0.008 Lux (F1.2, 50IRE)
S/N	>52dB
WDR	120dB
Lens Mount	C/CS
DC-Iris	DC 4V (4 Pins)
Motor Zoom/focus	DC 5V (4 Pins)
Video	
Max. Resolution	1920 × 1080
Video Compression	H.264,MJPEG
Frame Rate	1080P (1920*1080) 30 fps; 720P (1280*720) 30 fps; D1 (720*576) 25 fps
9:16 Corridor Mode	Support
ROI	Support
Video Streaming	Dual
OSD	Up to 8 OSDs
Privacy Mask	Up to 4 areas
Audio	
Audio Compression	G.711
Two-way Talking	Support
Storage	
Edge Storage	SD, up to 32 GB
Back-end Storage	Dual direct-to-iSCSI data block storage
Cache Post Recording	Support
Network	
Protocols	L2TP,IPv4,IGMP,ICMP,ARP,TCP,UDP,DHCP,PPPoE,RTP,RTSP,Qos,NTP,FTP,HTTP,SNMP,SIP
Compatible Integration	ONVIF, IMOS,API
Interface	
Audio I/O	3.5 mm audio interface Input: impedance 35 kΩ; amplitude 2 V [p-p] Output: impedance 600 Ω; amplitude 2 V [p-p]
Alarm I/O	2 / 1
Serial Port	1 RS485 (support Pelco-D/P)
Network	10M/100M Base-TX Ethernet
Video Output	1 BNC, impedance 75 Ω; amplitude 1 V [p-p]
General	
Power Supply	24 V AC, 12 V DC, or PoE (IEEE802.3 af) Power consumption: 4.8 W (with ICR switch: extra 2W)
Dimensions (L x W x H)	151.5 x 71 x 65 mm (6.0" x 2.8" x 2.6") (excluding the lens)

Weight	0.48 kg (1.1 lb)
Working Environment	–20°C ~ +60°C (-4°F ~ 140°F), Humidity ≤ 90% RH(non-condensing)

Dimensions

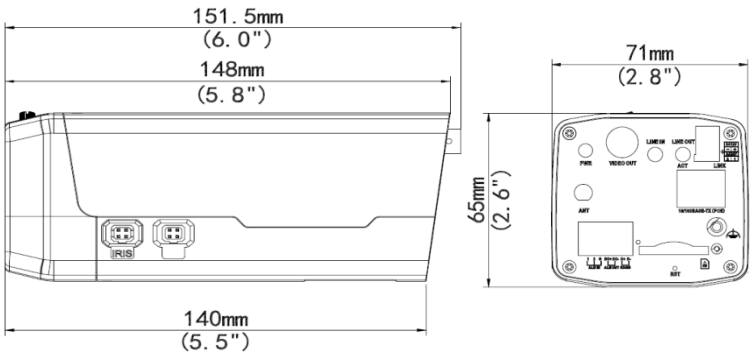

Installation

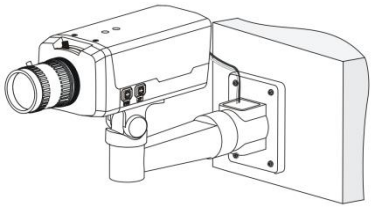

Bare mount

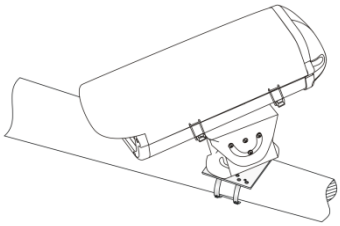

Housing mount

Accessories

Installation mode	Accessories	Description
Bare mount	AE-TR-UM06 or TR-UM06-A	Indoor wall, pendant, or desktop installation
Housing mount	Indoor housing: AE-HS-108 Outdoor housing: AE-HS-215S, AE-HS-215SHB	Outdoor installation
Corridor Format mount	L-shaped mount:AE-TR-SM06	

Zhejiang Uniview Technologies Co., Ltd.

South Tower, Building 10, Wanlun Science Park, 88 Jiangling Road, Hangzhou, P.R.China 310051

Email：overseasbusiness@uniview.com; globalsupport@uniview.com

http://www.uniview.com

©2014 Zhejiang Uniview Technologies Co., Ltd. All rights reserved.

*Product specifications and availability are subject to change without notice.